Confidential Information. Property of Merit Sensor Systems, Inc.
Reproduction or use without written consent is prohibited.

REVISIONS			
REV.	ECN:	DESCRIPTION	DATE
001	DCO #	INITIAL RELEASE	mm/yy

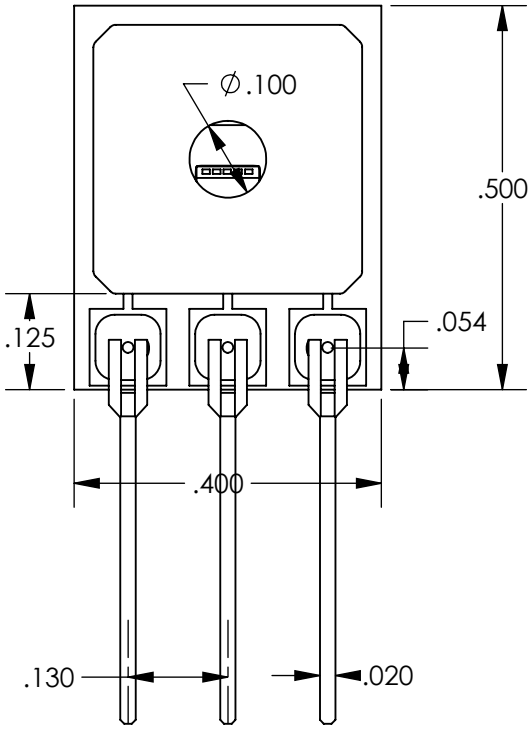

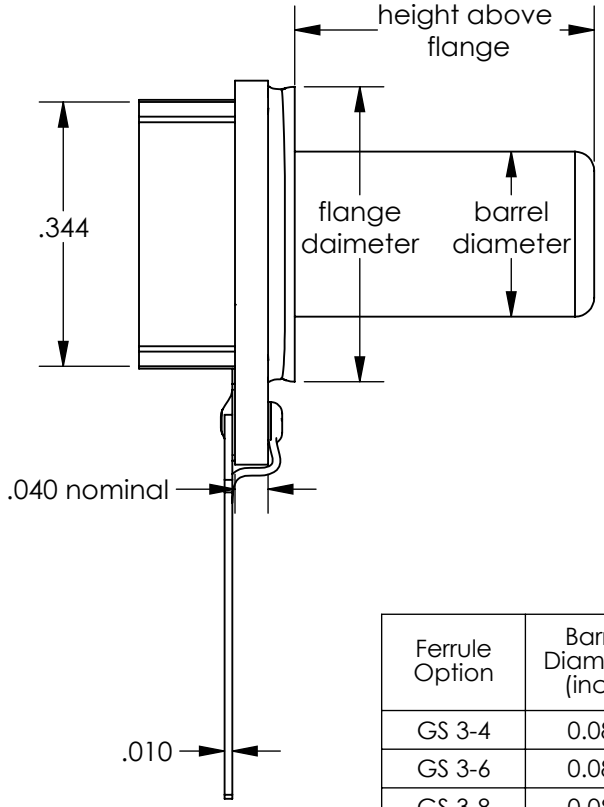

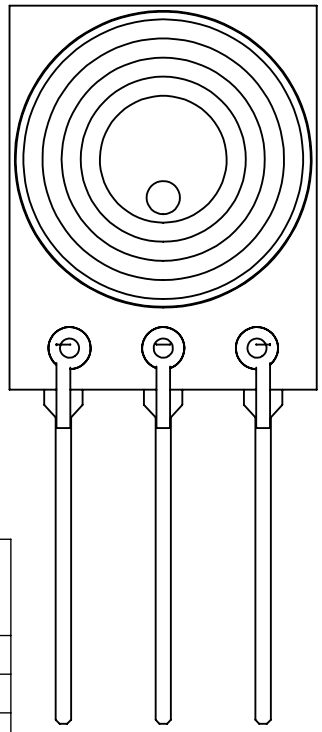

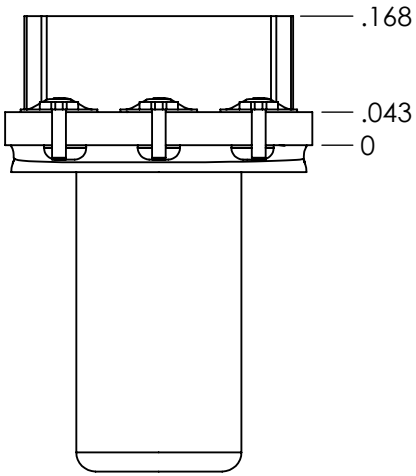

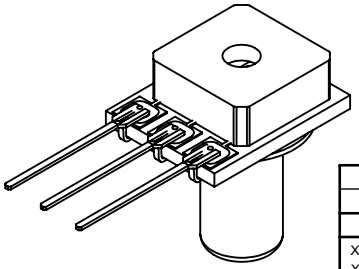

Ferrule Option	Barrel Diameter (inch)	Flange Diameter (inch)	Height Above Flange (inch)
GS 3-4	0.089	0.150	0.125
GS 3-6	0.089	0.150	0.187
GS 3-8	0.089	0.150	0.250
GS 3-10	0.089	0.150	0.344
GS 4-4	0.121	0.200	0.125
GS 4-6	0.121	0.200	0.187
GS 4-8	0.121	0.200	0.250
GS 4-10	0.121	0.200	0.344

DRAWING LINKED: No
if YES, indicate locations:

DIMENSIONS IN: INCHES/(mm)			
TOLERANCES			
Inches:		mm:	
X.X ±	0.1	X ±	3
X.XX ±	0.01	X.X ±	0.3
X.XXX ±	0.005	X.XX ±	0.13
X.XXXX ±	0.0005	X.XXX±	0.013
FRAC. ±	1/16	ANGLE±	1/2°

DO NOT SCALE
BREAK ALL EDGES

DRAWN BY	DATE
C. Peterson	1/17/2013

MATERIAL:

MERIT SENSOR
MERIT SENSOR SYSTEMS, INC.

DRAWING TITLE:
TR with bottom port options

SIZE A | THIRD ANGLE | DRAWING NUMBER

SCALE: 4:1 | SHEET 4 OF 4 | REV 001